2

FLASHING LIGHT
CANTILEVER CROSSING
SIGNALS

There's something that appeals to everyone in

WESTERN'S

All-Aluminum Rotatable Cantilever Signal, Type A740

The Signal Engineer likes its low cost and ease of installation;
the Purchasing Agent, its low price and shipping cost;
the Stores Keeper, its lightness and ease of handling;
the erecting crew, its ease of installation;
the Signal Supervisor, its ease of maintenance;
and the general public likes its superior indication.

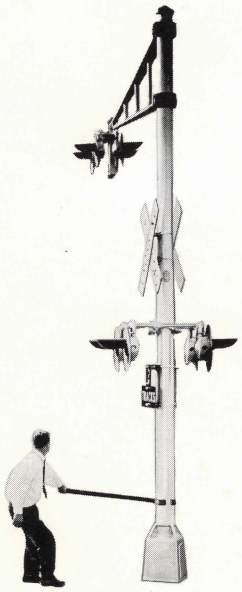

Who could ask for anything more?

The super-value cantilever, Western's All-Aluminum Rotatable Cantilever Signal, Type A740, combines functional efficiency and design excellence to bring you a cantilever that is lighter in weight, much easier to install and maintain, yet withstands gusts of 100 mph velocity.

And that's not all: Now an 8-foot span is available. Our Type A740 line now includes these units (with road clearance and comparative savings in weight):

COMPARATIVE WEIGHTS*

Span	Road Clearance	Model No.	Aluminum	Steel**
8-ft.	14′6″ 17′0″	A740-8A A740-8B	265 lbs. 280 lbs.	1675 lbs. 1700 lbs.
12-ft.	14′6″ 17′0″	A740-12A A740-12B	290 lbs. 305 lbs.	2210 lbs. 2250 lbs.
15-ft.	14′6″ 17′0″	A740-15A A740-15B	310 lbs. 325 lbs.	2315 lbs. 2380 lbs.
20-ft.	14′6″ 17′0″	A740-20A A740-20B	390 lbs. 410 lbs.	Not Furnished Not Furnished

* Approximate for structure only. ** Fixed span.

Would you like drawings and detailed information? . . . Please contact us:

WESTERN RAILROAD SUPPLY COMPANY
Division of Western Industries, Inc.

2742 West 36th Place • Chicago, Illinois 60632

CANADA: Lyman Tube & Supply Company, Ltd., 5420 Pare St. Montreal 9, Quebec

3057

A740 Rotatable Aluminum Cantilever Signal

The A740 rotatable aluminum cantilever signal was introduced in 1965 and has been supplied to 28 railroads for installation in 24 states and Canada.

This folder includes description, drawings, ordering references and instructions for erection.

The A740 structure is designed to provide a light weight, maintenance free support for highway crossing flashing light signals, signs and bell. The structure is easily assembled on the ground with indexed parts and may be raised into position by mobile crane or A frame. Its light weight, approximately 300 lbs., permitted one customer to erect it from the top of a truck body when crane was not available.

The A740 cantilever is locked in normal position with span extended over highway and may be rotated 75° or 105° clockwise or counterclockwise and locked for servicing. An extension ladder can be hooked to ladder rest at outer end of span to permit lamp changes and roundel cleaning. Rotation is effected by inserting a short length of 1½″ dia. pipe, into bore of bottom ladder rest, and using it as a lever.

The 8″ dia. pole is provided with 2-2″ x 4″ oblong holes for junction box arms at A and B. Pole is shipped with cover on hole B. An additional cover is supplied for hole A when lamps are not required on 8″ pole.

For those applications where junction box arm is to be attached to an 8″ pole at an angle different than shown on drawing we furnish an arm with blank back GRS cat. section 30 ref. D with 1-2″ x 4″ oval cover plate, drilled and tapped for 3/4″ flex. conduit fitting, for hole B. Thus all light arrangements can be accommodated without requiring additional holes in 8″ pole.

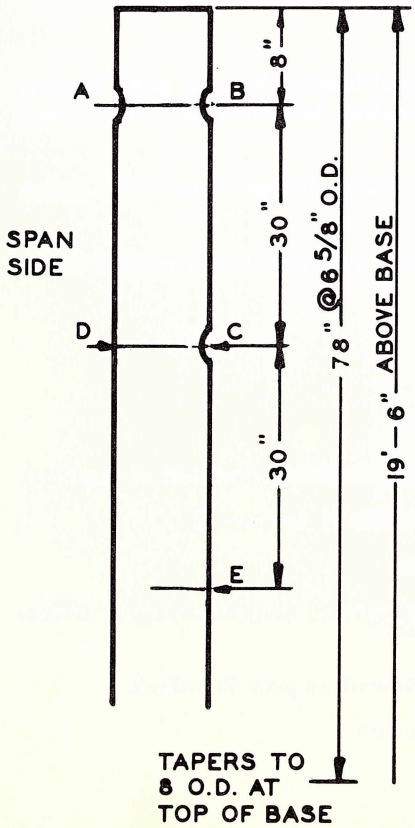

New design pole for 14′6″ and 17′0″ clearance

When our present stock of poles for 8′ - 12′ and 15′ spans is shipped, we will furnish a new-unit design pole suitable for 14′6″ and 17′0″ clearance assemblies.

This pole will have a 78″ length instead of 48″ of straight 6⅝″ O.D. section at the top and drilled with 3-1⅜″ dia. holes for 17′0″ road clearance assembly. (holes A-B and C)

When assembly is required for 14′6″ road clearance, customer will drill 2-1⅜″ dia. holes D&E with hole saw at center punched marks and install 2-1⅜″ dia. metal closures to holes A&B.

If user drills holes D&E and desires at a later date to increase the clearance to 17′, holes D&E should be welded closed using aluminum alloy 6061 or 6063 for the plug and aluminum alloy 4043 or 5356 welding wire. Care should be taken to use clean plugs and proper welding techniques.

A740 Rotatable Aluminum Cantilever Signal

1 — Typical ordering reference:

2 — Type A740-15B rotatable aluminum cantilever signal 15′ span

17′ road clearance complete with foundation bolts ref. 4, 4a or 4b. (specify)

Two-way indication lights on span ref. 5

Two-way indication lights on pole ref. 6

Reflector type signs ref. 106, 116 and 126, with fastenings.

1 signal to have bell ref. 8

1 signal to have ladder ref. 19a (or 19)

2 — Directions for erection—Reference dwg. A740 - 8A/8B—20A/20B

Note: Pole is shipped complete with base housing B, top rotation support C, rain cap 23, and adapter plate H. Adapter plate H is bolted to base casting lugs with four short bolts for shipment. Span is shipped as a separate unit.

Both pole and span are tire wrapped to protect surfaces in shipment and handling. Remove before raising structure. If the aluminum base housing is to rest on concrete foundation, the bottom should be painted with heavy coat of asphalt paint. It is not necessary to paint bottom of adapter plate H as it is galvanized and does not touch foundation.

A. With Crane which can raise assembly above top of foundation.

1. Lay out pole and span on ground in position for assembly with top of pole near foundation.
2. Insert 1″ rubber grommet in top hole, span side of pole.
3. Install wires from outer end of span, through grommet to oval hole at base of pole, leaving slack at each end for connection to terminals and at the bottom for rotation, (tuck slack back into pole).
4. Clamp span to pole, noting that bosses on inside faces of back clamps mate with index holes in pole.
5. Raise top of pole and span several feet off ground and attach junction box arm and flashing lamps ref. 5 to span.
6. Complete wiring at junction box on span.
7. Attach pinnacles and bell.
8. Assemble hooks to end of extension ladder dwg. 6540-20/24.
9. Attach upper ladder support ref. 20, when used, using ladder to locate position of support.
10. Loosen but do not remove shipping bolts holding adapter plate H to base B.
11. Attach guide rope to bottom ladder rest at outer end of span.
12. Attach sling to upper arm of span about 2′ from pole, being careful to protect span structure from abrasion.
13. Base should rest on piece of wood so it does not slide on ground as pole is raised.
14. Raise assembled structure until it is suspended over foundation.
15. Remove four shipping bolts described in 10.
16. Lower base onto foundation bolts.

A740 Rotatable Aluminum Cantilever Signal

17. Line up pole so it is straight or with slight rake to field side. Make sure adapter plate H is centered within housing so there will be no binding at C when structure is rotated.
18. Fasten four nuts on foundation bolts sufficiently to hold structure.
19. Remove sling.
20. Test for ease of turning.
21. Tighten four nuts on foundation bolts.
22. Install terminal board 23 on 2 front foundation bolts and apply jam nuts.
23. Attach other items to 8″ pole and complete wiring.
24. Lamps on span may be aligned by workman on ladder hooked over ladder rest. At this time the span is in operating position over the road. The four torque bolts F must be in place and tightened to lock structure during this operation.

    When span is rotated to service position, it is only necessary to use two torque bolts F finger tight at L2-L3 to hold it during servicing.

    If left for a time in service position, the four bolts should be tightened.
25. End flange E and plate H are indexed for 0° (span over street) and 75° and 105° clockwise or counterclockwise rotation. Span may be rotated 360° in either direction.

B. With Crane of shorter reach than in "A" above.

1. Raise pole complete with base to top of foundation and fasten as described in items A2-7-8-9-10-13-14-15-16-17-18-20-21.
2. Wire span, raise and feed wires into pole. Fasten span to pole.
3. Complete fitting and wiring.

C. Without Crane

1. Complete items A2, 8 and 9.
2. Remove four torque bolts F from base housing and pull pole out of base.
3. Remove four 1″ shipping bolts holding adapter plate H to base.
4. Assemble base including adapter plate H on foundation. Check that adapter plate H is properly centered in base housing.
5. Fasten nuts on foundation bolts.
6. Make sure top rotation support C is in place.
7. Raise pole and lower it over bottom rotational support D on adapter plate H. Make sure pole turns freely.
8. Apply four torque bolts F with pole in service position.
9. Complete as in B.

3 — Sub-base is available for application of A740 Cantilever to existing foundation with 14⅛″ x 14⅛″ bolt spacing (as used for 10′ and 12′ steel Cantilever Signals). This may be ordered as "Sub-base" and cover for A740 type aluminum cantilever dwg. 6540-50.

A740 Rotatable Aluminum Cantilever Signal

4 — Concrete Foundations—Reference dwg. A740-20 for general arrangement.

A. Poured foundation should use 1″ dia. galvanized or bi-metallic steel bolts, ref. 4, 4a or 4b, as outlined below. Sectional foundations should use bolts with thread length specified in 3 and 4 below.

	Min. Length Thread	Bolt Extends above top of Foundation
1. Poured foundation with leveling nuts	5½″	5¼″
2. Poured foundation without leveling nuts	3″	4⅛″
3. Sectional foundation with leveling nuts	7″*	6½″*
4. Sectional foundation without leveling nuts	3″	4⅛″

*This allows for nut and washer to lock modules together.

B. When leveling nuts are used.

1. Apply bottom nut and washer as shown on A740-20. Level tops of washers, then raise the two nuts on span side 1/4 turn for 8′, 1/2 turn for 10′ - 12′, 3/4 turn for 15′ and 1 turn for 20′ spans to incorporate desired rake of pole. (Take care to see that nuts can be run down with fingers.)
2. Erect base and pole as per instructions 2A-B-C above. Tighten 1″ nuts, finger tight, against adapter plate H. Tighten leveling nuts against underside of base housing, first noting that adapter plate H is properly centered in base housing.
3. Seal open space between base housing and concrete with grout or sealing compound. This may be delayed several days if settlement is expected and re-leveling is desired.

C. When leveling nuts are not used.

1. Follow instructions 2A-B-C.
2. Top of foundation should be raked slightly or shims used to obtain desired rake of pole.
3. Check to see that adapter plate H is properly centered in base housing.
4. Ratchet wrench with Universal joint and extension bar will be required to fasten nuts inside base housing.
5. Seal around base per 3-B-3.

A740 Rotatable Aluminum Cantilever Signal

See Dwg. A740 - 8A/8B . . . 20A/20B.

Ref. No.	DESCRIPTION	Piece No.
1	Pole, tapered 8″ x 6.25″ O.D. x 17′ lg. .219″ wall complete with base, raincap and pinnacle (14′6″ road clearance)	50199-Y5
1a	Same as above except 19′6″ lg. (17′ road clearance)	50199-Y7
	(Above for use with 8′ to 15′ spans, ref. 2, 2a, 2b, 2c)	
*1b	Pole, tapered 8″ x 6.25″ O.D. x 17′ lg. .3125″ wall complete with base, raincap and pinnacle (14′6″ road clearance)	50199-Y6
1c	Pole as in 1b except 19′6″ lg. .3125″ wall (17′ road clearance)	50199-Y8
	(Above for use with 20′ span, ref. 2d)	
2	8′ span complete with clamps	50199-Y9
*2a	10′ span complete with clamps	50199-Y1
2b	12′ span complete with clamps	50199-Y2
2c	15′ span complete with clamps	50199-Y3
2d	20′ span complete with clamps	50199-Y4
3	Terminal board assembly	6540-26
4	Set (4) foundation bolts 1″ dia. x 42″ lg. stl. with 2 reg. hex nuts, 1 jam nut and 1-1″ plate washer-galvanized	11079-42
4a	Set (4) foundation bolts as above except 1″ dia. x 72″ lg.	11079-72T
4b	Set (4) foundation bolts 1″ dia. x 60″ lg. bi-metallic—(stainless stl. threaded tip) with 2 reg. hex nuts, 1 jam nut and 1-1″ plate washer—stainless	6540-70
5	Type 970-201 Flashing Light assembly, two-way indication for 4″ I.D. pipe mounting with jct. box arm. 960-5	970-204
5a	Same as Ref. 5 but one-way indication with jct. box arm 960-3	970-202
6	Type 970-201 Flashing Light assembly, two-way indication for 8″ tapered pole using jct. box arm 960-54T for elevation A-A	970-304T
6a	Same as Ref. 6 but one-way indication with jct. box arm—960-54XT	970-304XT
7	Type 970-201 Flashing Light assembly, two-way indication for 8″ tapered pole with jct. box arm 960-5T for elevation B-B	970-204T
7a	Same as Ref. 7 but one-way indication with jct. box arm—960-3T	970-202T
8	Bell #222, 10-16 v. DC with socket for mtg. on 6⅝″ O.D. pipe	0222HR
10	"Railroad Crossing" sign without mounting fittings.	
10a	Reflex reflective sheet on aluminum	3380-7L
10b	Reflector button, synthetic enamel finish. Sh. Stl.	3380-4L
10c	Reflector button, vitreous enamel finish. Sh. Stl.	3380-3L
11	"Tracks" sign (specify numeral) without mounting fittings	
11a	Reflex reflective sheet on aluminum	3368-7L
11b	Reflector button, synthetic enamel finish. Sh. Stl.	3368-4L
11c	Reflector button, vitreous enamel finish. Sh. Stl.	3368-3L
12	"Stop on Red Signal" sign without mounting fittings	
12a	Reflex reflective sheet on aluminum	3366-7L
12b	Reflector button, synthetic enamel finish. Sh. Stl.	3366-4L

*Item available but not stocked.

A740 Rotatable Aluminum Cantilever Signal

Ref. No.	DESCRIPTION	Piece No.
13	Mounting kit for attaching signs, ref. 11b, 11c, 12b, to tapered pole. (1 req'd per sign)	3366-321T
13a	Mounting kit for attaching signs, ref. 10b, 10c, to tapered pole. (1 required per sign)	3380-321T
14	5/8″ offset bolt for attaching jct. box arm to tapered pole (2 per arm) included in ref. 6 and 7	3364-47
15	1/2″ offset bolt for attaching signs to tapered pole (4 per sign) with hex nut and two washers (included in ref. 13 and 13a)	3364-48
16	Sign adapter, (2 per sign) (included in ref. 11b, 11c, 12b)	3364-A1
17	Extension bracket, with bolts, req'd only for reflector button signs ref. 10b, 10c, 11b, 11c and 12b, on poles with ladder mtg. (2 req'd per sign)	3366A-40
18	Back clamp, alum. (included in ref. 13)	950-A-34
19	20′ aluminum extn. ladder (for 14′6″ road clearance)	6540-20
19a	24′ aluminum extn. ladder (for 17′ road clearance)	6540-24
20	Upper bracket, alum. for ladder support comp. (1 per installation when ladder is mounted on pole)	6540-23
21	Padlock "T" alum. for ladder support comp. (1 per installation when ladder is mounted on pole)	6540-30A
22	1½″ dia. pipe galv. 4′ lg. without threads	
23	Rain cap cast alum. incl. in. 1	
24	1⅜″ dia. A1 caps (2 furnished for closing 2 holes at top of pole when 14′6″ road clearance is req'd)	
25	Sub-base for use on existing foundation with 14⅛″x14⅛″ bolt spacing	6540-50

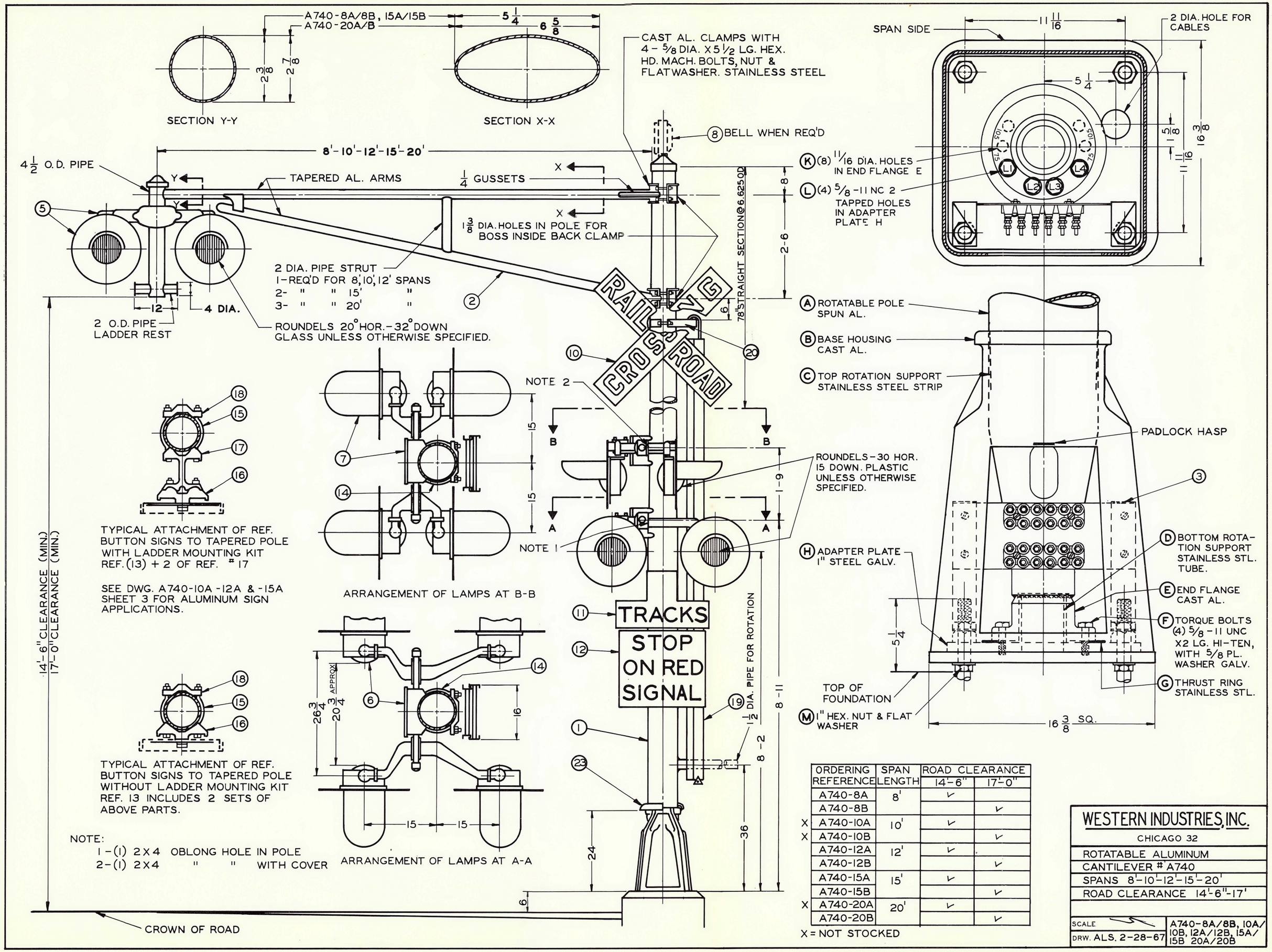

NOTE:
1 - (1) 2X4 OBLONG HOLE IN POLE
2 - (1) 2X4 " " WITH COVER

	ORDERING REFERENCE	SPAN LENGTH	ROAD CLEARANCE 14'-6"	ROAD CLEARANCE 17'-0"
	A740-8A	8'	✓	
	A740-8B			✓
X	A740-10A	10'	✓	
X	A740-10B			✓
	A740-12A	12'	✓	
	A740-12B			✓
	A740-15A	15'	✓	
	A740-15B			✓
X	A740-20A	20'	✓	
	A740-20B			✓

X = NOT STOCKED

WESTERN INDUSTRIES, INC.
CHICAGO 32

ROTATABLE ALUMINUM
CANTILEVER # A740
SPANS 8'-10'-12'-15'-20'
ROAD CLEARANCE 14'-6"-17'

SCALE
DRW. ALS. 2-28-67

A740-8A/8B, 10A/10B, 12A/12B, 15A/15B 20A/20B

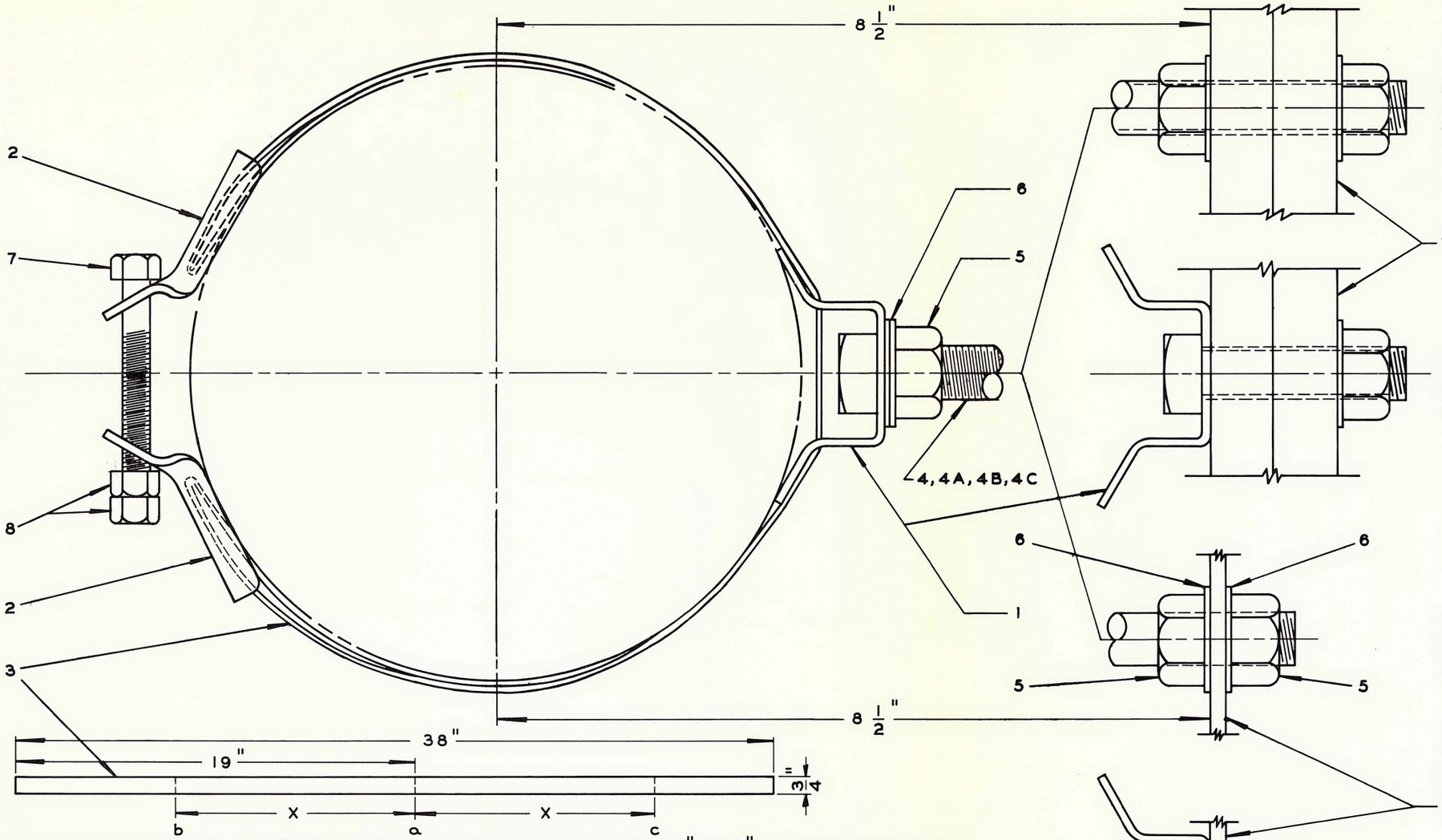

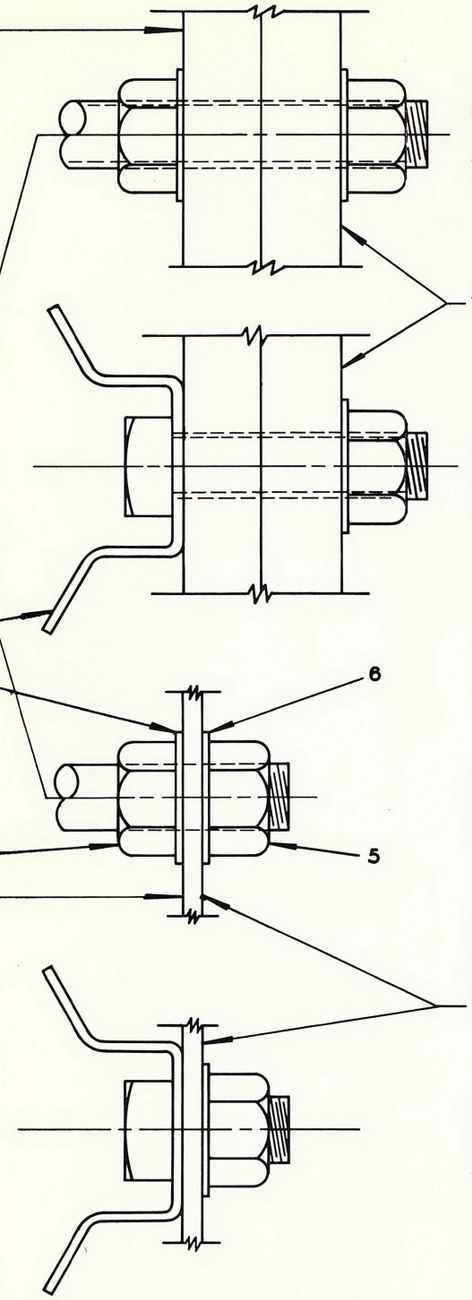

FIG."A"
FOR USE WITH RR CROSSING SIGN ON POLE EQUIPPED WITH LADDER BRACKETS.

SIGN #3380-7L REF. 10A

FIG."C"
FOR USE WITH RR CROSSING SIGN ON POLE WITHOUT LADDER BRACKETS.

FIG."B"
FOR USE WITH STOP ON RED SIGNAL AND TRACKS SIGNS WITH LADDER BRACKETS.

STOP ON RED SIGNAL SIGN #3366-7L REF. 12A & TRACKS SIGN #3368-7L REF. 11A

FIG."D"
FOR USE WITH STOP ON RED SIGNAL AND TRACKS SIGNS WITHOUT LADDER BRACKETS.

INSTRUCTIONS FOR ASSEMBLY OF SIGN STRAPPING ON 6 5/8" TO 8" O.D. TAPERED POLE

X = 1/2 CIRCUMFERENCE OF POLE AT POINT OF ATTACHMENT MINUS 1/2"
A-MEASURE CIRCUMFERENCE OF POLE AND MARK OFF POINTS a,b & c ON STRAP.
B-ASSEMBLE 5/8" D. BOLT REF. 4 TO STAND-OFF REF. (1)
C-ASSEMBLE (1) STAND-OFF REF. (1) & (2) BUCKLES REF. (2) TO STRAP
D-BEND STRAP BACK OVER BUCKLE AT POINTS b & c HAMMER FLAT.
E-WRAP STRAP AROUND POLE AND DRAW TIGHT WITH 5/16" BOLT REF. 7

HINT:
APPLY ASSEMBLED STRAP TO POLE HIGHER THAN FINAL POSITON
ENGAGE BOLT REF. 7 AND THEN LOWER TO DESIRED POSITION

REF.	DESCRIPTION	MATERIAL	PIECE NO.	REQ'D. FOR FIG. A	" " B	" " C	" " D	REMARKS
1	STAND-OFF	STAINLESS	3364-55	2	2	2	2	
2	BUCKLE	STL. CAD. PLT.	3364-56	4	4	4	4	
3	3/4"-(.030)" STRAP X 38" LG.	STAINLESS	3364-57	2	2	2	2	
4	5/8"-11 X 6" LG. SQ. HD. BOLT (FULL THREAD)	"	3364-58	2	-	-	-	
4A	5/8"-11 X 4 1/2" LG. SQ. HD. BOLT (FULL THREAD)	"	3364-59	-	2	-	-	
4B	5/8"-11 X 2 1/2" LG. " " " " "	"	3364-60	-	-	2	-	
4C	5/8"-11 X 1" LG. " " " " "	"		-	-	-	2	
5	5/8"-11 HEX. NUT	"		6	6	2	2	
6	5/8" PLATE WASHER	"		8	8	2	2	
7	5/16"-18 x 2 1/4" HEX. HD. BOLT	"		2	2	2	2	
8	5/16"-18 HEX. NUT	"		4	4	4	4	

WESTERN INDUSTRIES, INC.
CHICAGO 32

APPLICATION OF ALUMINUM SIGNS WITH STRAP TYPE SUPPORTS TO TAPERED POLE

SCALE: 12"=1'-0"
DWG: LG. 3-16-67
A740-8A/8B, 10A/10B, 12A/12B, 15A/15B, 20A/20B

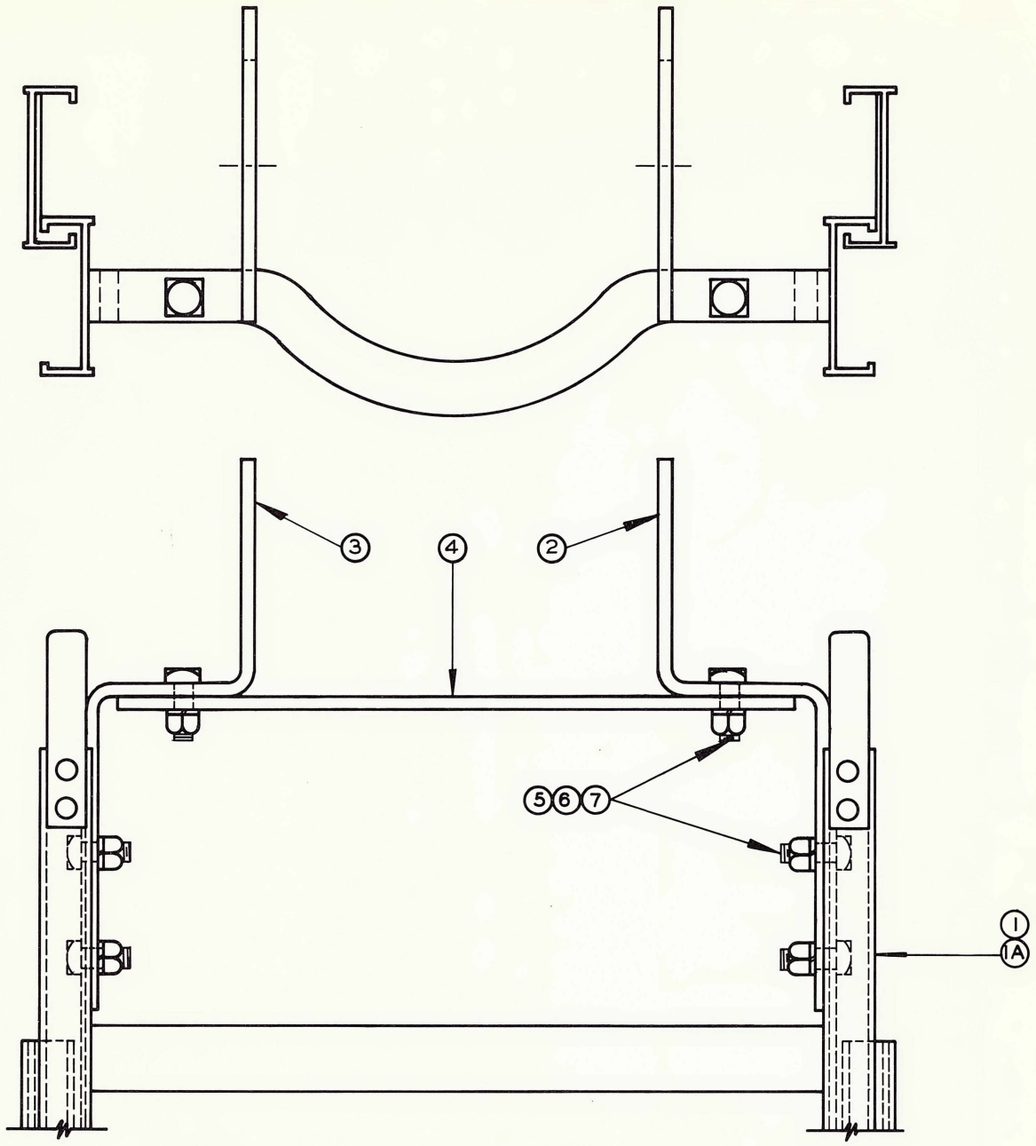

NOTE:
6540-22K KIT CONSISTS OF
ITEMS #2, 3, 4, 5, 6 & 7

TO BE SHIPPED AS: (1) LADDER ONLY #6540-32AM OR -32BM
(1) KIT #6540-22K

ITEM	DESCRIPTION	MATERIAL	DWG. NO.	6540-20 NO. REQ'D.	6540-24 NO. REQ'D.
1	20' EXTENSION LADDER FOR 14'-6" CLEAR.	AL.	6540-32AM	1	0
1A	24' EXTENSION LADDER FOR 17'-0" CLEAR.	AL.	6540-32BM	0	1
2	LADDER HOOK R.H.	ST. STL.	6540-33RM	1	1
3	LADDER HOOK L.H.	" "	6540-33LM	1	1
4	STRAP	" "	6540-34M	1	1
5	3/8"-16 × 1" LG. SQ. HD. BOLT	" "		6	6
6	3/8"-16 HEX. NUT	" "		6	6
7	3/8" SPRING LOCK WASHER	" "		6	6

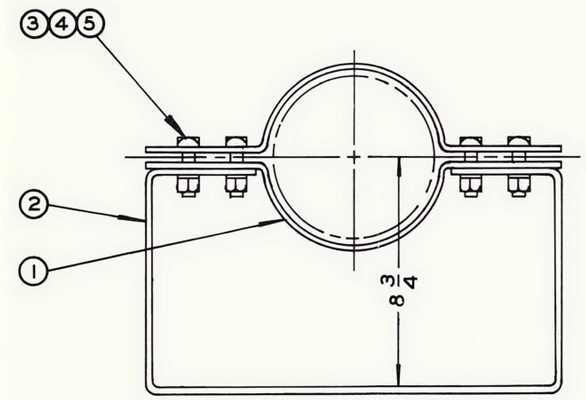

UPPER LADDER SUPPORT 6540-23
FURNISHED WHEN LADDER IS ORDERED

ITEM	DESCRIPTION	MATERIAL	DWG. NO.	NO. REQ'D.
1	PIPE CLAMP FOR 6" PIPE	ALUM.	6540-23-1	2
2	LADDER HANGER	ALUM.	6540-23-2	1
3	1/2"-13 × 2 1/4" SQ. HD. BOLT	ST. STL.		4
4	1/2"-13 HEX. NUT	" "		4
5	1/2" SPRING LOCK WASHER	" "		4

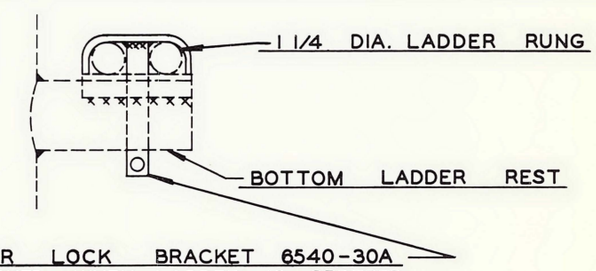

LADDER LOCK BRACKET 6540-30A
FURNISHED WHEN LADDER IS ORDERED

WESTERN INDUSTRIES, INC.
CHICAGO 32

EXTENSION LADDER
ASS'Y AND MOUNTING
DETAILS FOR A740
CANTILEVER

SCALE: 6" = 1'-0" | 6540-20/24
DRW LMG. 2-28-67 | 6540-23/30A

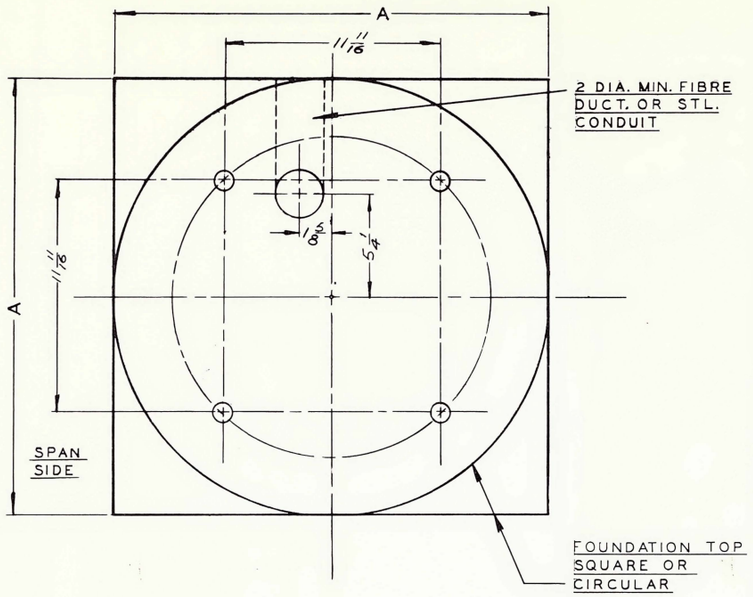

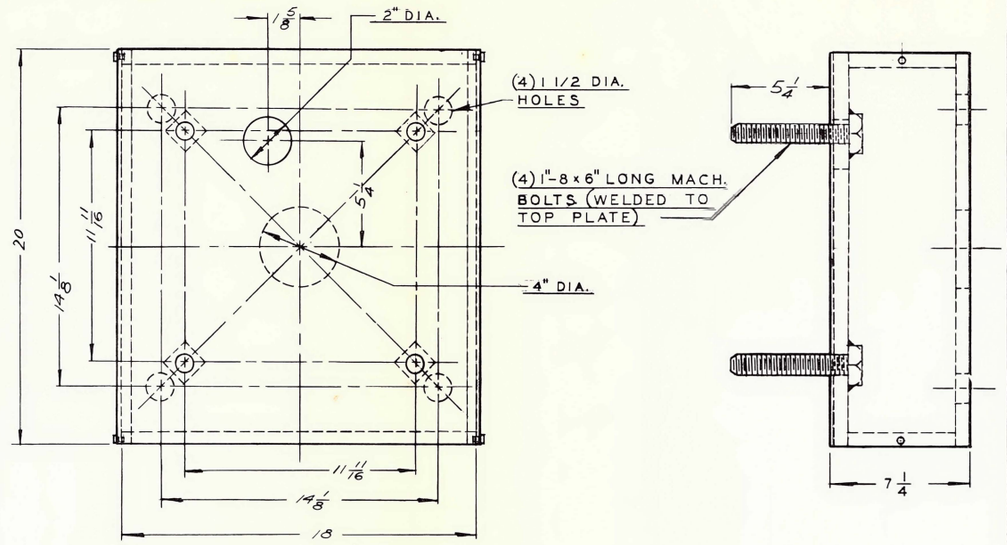

SUB BASE 6540-50 (STL. GALV.)
FOR USE ON EXISTING FOUNDATIONS
WITH 14 1/8" x 14 1/8" BOLT SPACING

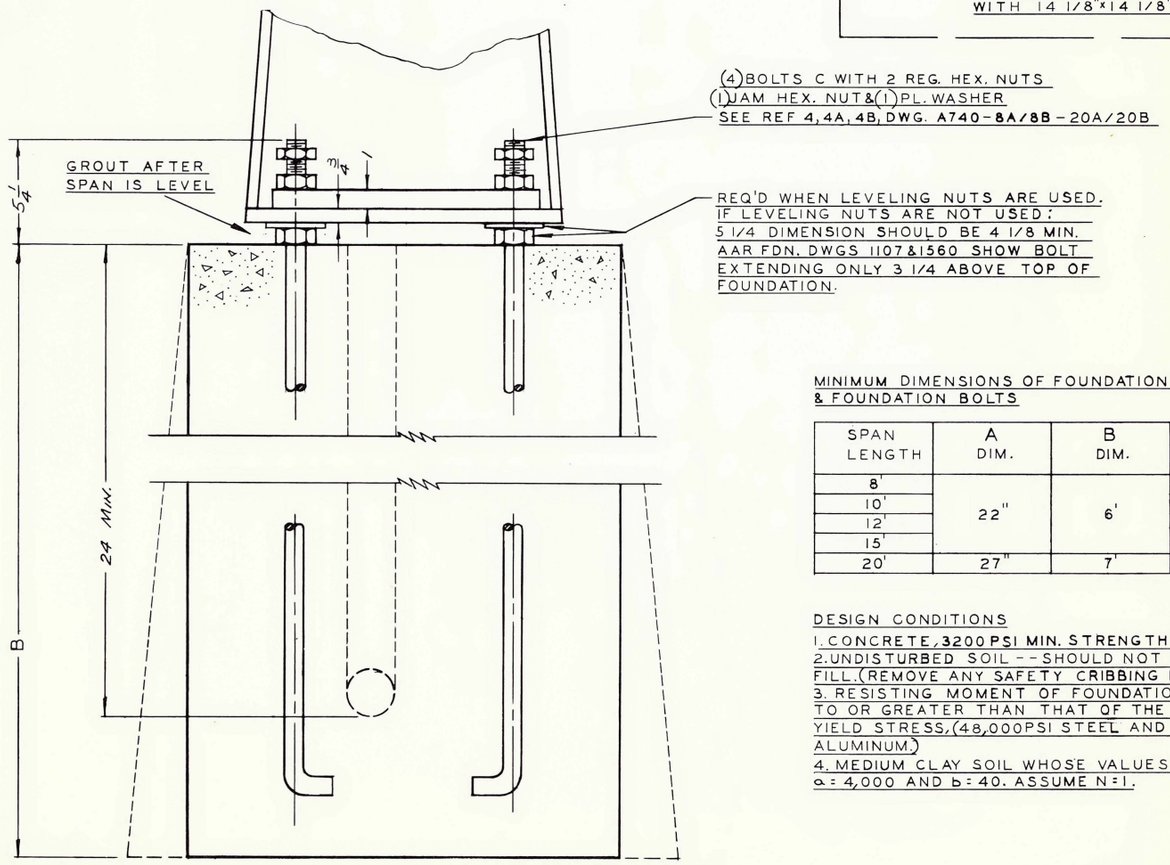

MINIMUM DIMENSIONS OF FOUNDATION & FOUNDATION BOLTS

SPAN LENGTH	A DIM.	B DIM.	C BOLT LENGTH
8'	22"	6'	42"
10'			
12'			
15'			
20'	27"	7'	60"

DESIGN CONDITIONS

1. CONCRETE, 3200 PSI MIN. STRENGTH IN 28 DAYS
2. UNDISTURBED SOIL -- SHOULD NOT BE FRESH FILL. (REMOVE ANY SAFETY CRIBBING DURING POUR.)
3. RESISTING MOMENT OF FOUNDATION IS EQUAL TO OR GREATER THAN THAT OF THE POLE AT YIELD STRESS, (48,000 PSI STEEL AND 25,000 PSI ALUMINUM.)
4. MEDIUM CLAY SOIL WHOSE VALUES ARE: $a = 4{,}000$ AND $b = 40$. ASSUME $N = 1$.

WESTERN INDUSTRIES, INC.
CHICAGO 32

CONCRETE FOUNDATION
FOR A740 CANTILEVER
SIGNAL

SCALE: 1/4" = 1"
DRW: LG. 3-8-67
A740-20

WESTERN INDUSTRIES, INC.
CHICAGO 32

CONCRETE FOUNDATION
FOR A740 CANTILEVER
SIGNAL

SCALE: 1/4" = 1"
DRW: LG. 3-8-67
A740-20